REV	LOCATIONS	DESCRIPTION	DATE	REVISER	APPD
1	1	Size changes	26/APR/20	KATE	CHERRY
2	2	Tolerance changes	22/AUG/23	MATT	LEO
3	3	Correct View and add circuit size layout	15/NOV/24	MATT	LEO

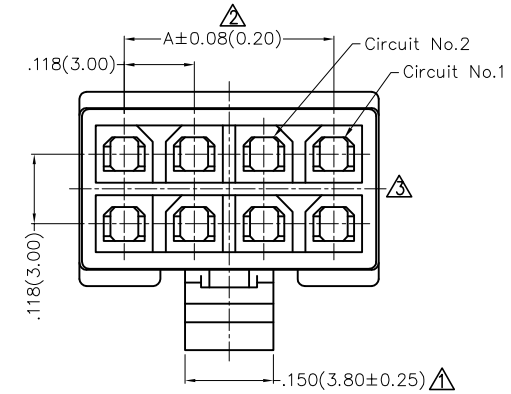

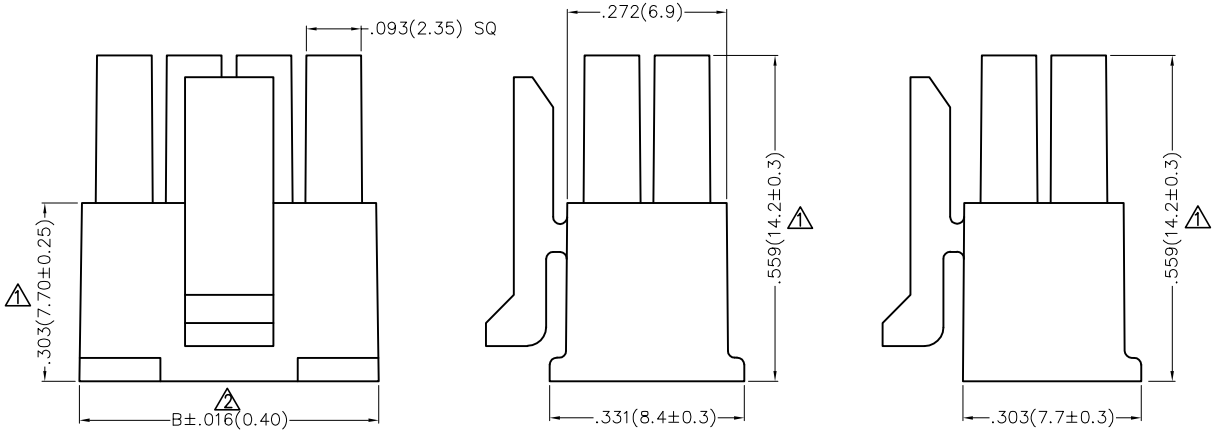

Electrical
Temperature Range–Operating: –40°C～+105°C
Material
Housing: PA66(UL 94V–0)
Applicable Terminal: FT30001
Mates With (Housing): FHG30003 Series
Mates With (Wafer): FWF30001, FWF30002, FWF30003
FWF30016, FWF30019,FWF30022 Series

Circuits (n)	Part No.	Dimensions(in/mm)	
		A	B
2	FHG30001–D02M2K6B	–	.152(3.85)
4	FHG30001–D04M2K6B	.118(3.00)	.270(6.85)
6	FHG30001–D06M2K6B	.236(6.00)	.388(9.85)
8	FHG30001–D08M2K6B	.354(9.00)	.506(12.85)
10	FHG30001–D10M2K6B	.472(12.00)	.624(15.85)
12	FHG30001–D12M2K6B	.591(15.00)	.742(18.85)
14	FHG30001–D14M2K6B	.709(18.00)	.860(21.85)
16	FHG30001–D16M2K6B	.827(21.00)	.978(24.85)
18	FHG30001–D18M2K6B	.945(24.00)	1.096(27.85)
20	FHG30001–D20M2K6B	1.063(27.00)	1.215(30.85)
22	FHG30001–D22M2K6B	1.181(30.00)	1.333(33.85)
24	FHG30001–D24M2K6B	.1299(33.00)	1.451(36.85)

Circuit Size Layout 3

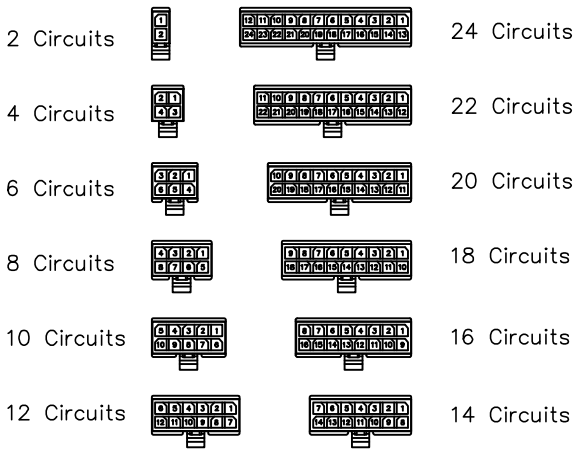

Ordering Information

FHG 300 01 — D XX M 2 K6 B
1 2 3 4 5 6 7 8 9

1	Category	2	Series Number	3	Distinction No.	4	Row Option	5	Circuits
	FHG–Housing		300–Pitch3.0mm		01		D–Double Row		XX
6	Entry Type	7	Material–Resin	8	Color–Resin	9	Packaging		
	M–Male		2–PA66		K6–Black		B–PE Bag		

THIRD ANGLE PROJECTION	GENERAL TOLERANCES (UNLESS SPECIFIED)		APPROVE BY FRANK	DATE 25/JUN/13	PART NO. FHG30001–DXXM2K6B	ITEM NO. FHG30001
DESIGN UNITS Inch (metric)	X.±.012(0.30)	X.°±5°	CHECKED BY JACOB	DATE 25/JUN/13	TITLE Wire to Wire Pitch 3.0mm(Housing)	TXGA Building Technology Cornerstone
	X.X±.008(0.20)	.X°±2°				REV 3 / SHEET NO. 1/1
SCALE 5:1 / SIZE A4	X.XX±.006(0.15)	.XX°±1°	DRAWN BY CHERRY	DATE 25/JUN/13	THIS DRAWING CONTAINS INFORMATION THAT IS PROPRIETARY TO TXGA INDUSTRIAL ELECTRONICS(S.Z)CO.,LTD AND SHOULD NOT BE USED WITHOUT WRITTEN PERMISSION	
	X.XXX±.004(0.10)	.XXX°±0.5°				